Technical datasheet

1. Product Features

1.1 Electrical features

- V_{CES}=1200V
- $I_{C\ nom}$=35A / I_{CRM}=70A
- Low switching losses
- Low inductance
- Fast switching and short tail current
- Integrated NTC temperature sensor
- High power and thermal cycling capability

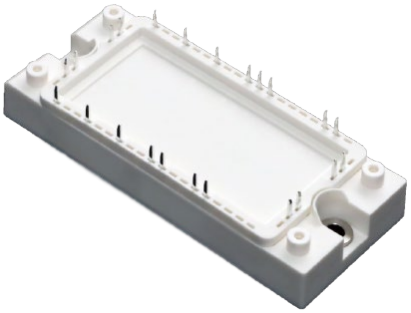

Figure1 IGBT Module

1.2 Mechanical features

- Al_2O_3 substrate with low thermal resistance
- Copper base plate

2. Typical Applications

- Switching mode power supply
- Drive inverters with brake system
- Uninterruptible power supply
- AC and DC servo drive amplifier

3. Description

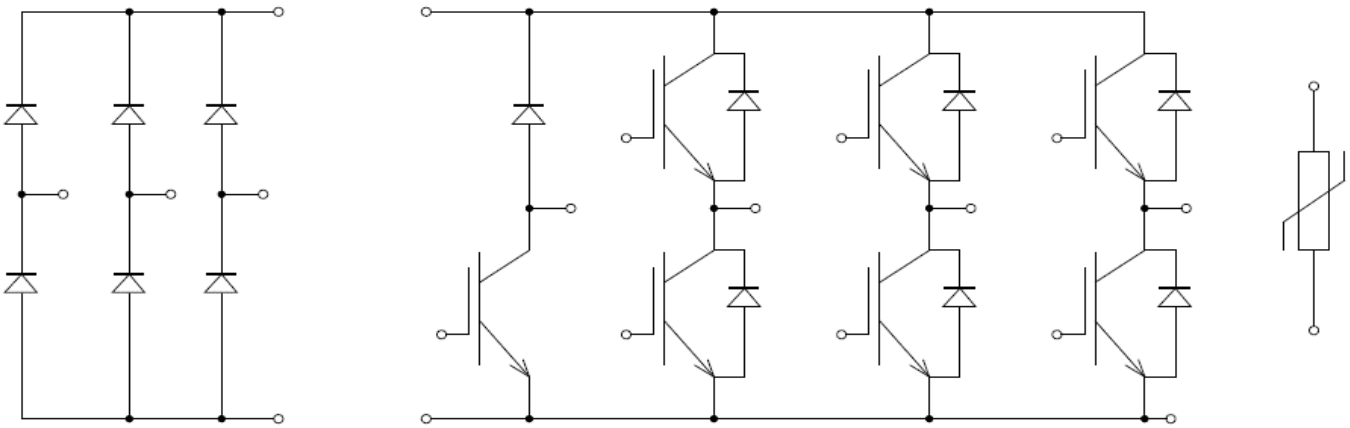

Figure 2 3 Phase Bridge+Rectifier+Brake

4. IGBT, Inverter

4.1 Maximum Rated Values

Parameter	Note or test condition	Symbol	Values	Unit
Collector-emitter voltage 集电极—发射极间电压	T_{vj} = 25°C	V_{CES}	1200	V
Continuous DC collector current 连续集电极电流	T_C = 100°C, T_{vj} max = 150°C	$I_{C\ nom}$	35	A
Repetitive peak collector current 集电极峰值电流	t_P = 1 ms	I_{CRM}	70	A
Total power dissipation 总功率损耗	T_C = 25°C, $T_{vj\ max}$ = 150°C	P_{tot}	300	W
Gate-emitter peak voltage 栅极－发射极峰值电压		V_{GES}	+/- 20	V

4.2 Characteristic value

Parameter	Note or test condition		Symbol	Values			Unit
				Min.	Typ.	Max.	
Collector-emitter saturation voltage 集电极－发射极饱和电压	I_C = 35 A, V_{GE} = 15 V	T_{vj} = 25°C T_{vj} = 125°C T_{vj} = 150°C	$V_{CE,sat}$		1.52 1.7 1.76		V V V
Gate threshold voltage 栅极阈值电压	I_C = 0.25mA, V_{CE} = V_{GE}, T_{vj} = 25°C		$V_{GE,th}$		5.89		V
Gate charge 栅极电荷	V_{GE} = -15 V ... +15 V		Q_G		0.44		µC
Internal gate resistor 内部栅极电阻	T_{vj} = 25°C		R_{Gint}		2.2		Ω
Input capacitance 输入电容	f=1MHz, T_{vj}=25°C, V_{CE}=25V, V_{GE}=0V		C_{ies}		6.15		nF
Reverse transfer capacitance 反向传输电容	f=1MHz, T_{vj}=25°C, V_{CE}=25V, V_{GE}=0V		C_{res}		0.08		nF
Collector-emitter cut-off current 集电极-发射极截止电流	V_{CE} = 1200 V, V_{GE} = 0 V, T_{vj} = 25°C		I_{CES}			1	mA
Gate-emitter leakage current 栅极-发射极漏电流	V_{CE} = 0 V, V_{GE} = 20 V, T_{vj} = 25°C		I_{GES}			100	nA
Turn-on delay time, inductive load 开通延迟时间	I_C = 35A, V_{CE} = 600V V_{GE} = +15/-15V $R_{G,on}$ = 15Ω	T_{vj} = 25°C T_{vj} = 125°C T_{vj} = 150°C	$t_{d,on}$		0.091 0.098 0.098		us us us
Rise time, inductive load 上升时间	I_C = 35A, V_{CE} = 600V V_{GE} = +15/-15V $R_{G,on}$ = 15Ω	T_{vj} = 25°C T_{vj} = 125°C T_{vj} = 150°C	t_r		0.042 0.049 0.049		us us us

(table continues...) 待续

Parameter	Note or test condition		Symbol	Values			Unit
				Min.	Typ.	Max.	
Turn-off delay time, inductive load 关断延迟时间	I_C = 35A, V_{CE} = 600V V_{GE} = +15/-15V $R_{G,off}$ = 15Ω	T_{vj} = 25°C T_{vj} = 125°C T_{vj} = 150°C	$t_{d,off}$		0.168 0.189 0.196		us us us
Fall time, inductive load 下降时间	I_C = 35A, V_{CE} = 600V V_{GE} = +15/-15V $R_{G,off}$ = 5Ω	T_{vj} = 25°C T_{vj} = 125°C T_{vj} = 150°C	t_f		0.196 0.322 0.336		us us us
Turn-on energy loss per pulse 开通损耗能量	I_C = 35A, V_{CE} = 600V, L_s=35nH V_{GE} = +15/-15V, di/dt =530A/µs $R_{G,on}$ = 15Ω (T_{vj} = 150°C)	T_{vj} = 25°C T_{vj} = 125°C T_{vj} = 150°C	E_{on}		4.781 6.3 6.846		mJ mJ mJ
Turn-off energy loss per pulse 关断损耗能量	I_C = 35A, V_{CE} = 600V, L_s=35nH V_{GE} = +15/-15V, dv/dt =4200V/µs $R_{G,off}$ = 15Ω (T_{vj} = 150°C)	T_{vj} = 25°C T_{vj} = 125°C T_{vj} = 150°C	E_{off}		2.359 3.402 3.696		mJ mJ mJ
SC data 短路数据	V_{GE} ≤15V, V_{CC} =600 V, t_P ≤ 8 µs, T_{vj} = 150°C , C_{GE} = 0.0uF , V_{CEmax} = V_{CES} - L_{sCE} · di/dt		I_{SC}		238		A
Thermal resistance, junction to case 结一外壳热阻	Per IGBT		$R_{th,JC}$			0.50	K/W

5. Diode, Inverter

5.1 Maximum Rated Values

Parameter	Note or test condition	Symbol	Values	Unit
Repetitive peak reverse voltage 反向重复峰值电压	T_{vj} = 25°C	V_{RRM}	1200	V
Continuous DC forward current 连续正向直流电流		I_F	35	A
Repetitive peak forward current 正向重复峰值电流	t_P = 1 ms	I_{FRM}	70	A

5.2 Characteristic value

Parameter	Note or test condition		Symbol	Values			Unit
				Min.	Typ.	Max.	
Forward voltage 正向电压	I_F = 35 A, V_{GE} = 0 V	T_{vj} = 25°C T_{vj} = 125°C T_{vj} = 150°C	V_F		1.65 1.58 1.51		V V V

(table continues...) 待续

Parameter	Note or test condition		Symbol	Values			Unit
				Min.	Typ.	Max.	
Peak reverse recovery current 反向恢复峰值电流	I_F = 35A, V_R = 600V V_{GE} = -15V , - di_F/dt = 430 A/µs (T_{vj}=150°C)	T_{vj} = 25°C T_{vj} = 125°C T_{vj} = 150°C	I_{RM}		41.3 47.6 49.7		A A A
Recovered charge 恢复电荷	I_F = 35A, V_R = 600V V_{GE} = -15V , - di_F/dt = 430 A/µs (T_{vj}=150°C)	T_{vj} = 25°C T_{vj} = 125°C T_{vj} = 150°C	Q_r		2.52 4.41 5.18		µC µC µC
Reverse recovery energy 反向恢复损耗（每脉冲）	I_F = 35A, V_R = 600V V_{GE} = -15V , - di_F/dt = 430 A/µs (T_{vj}=150°C)	T_{vj} = 25°C T_{vj} = 125°C T_{vj} = 150°C	E_{rec}		0.35 0.84 1.12		mJ mJ mJ
Thermal resistance, junction to case 结－外壳热阻	Per diode		$R_{th,JC}$			0.54	K/W

6. Diode, Rectifier

6.1 Maximum Rated Values

Parameter	Note or test condition	Symbol	Values	Unit
Repetitive peak reverse voltage 反向重复峰值电压	T_{vj} = 25°C	V_{RRM}	1600	V
Average Rectified Output current 整流器输出均方根电流	V_F = 1.2, T_{vj} = 150°C	I_F	35	A
Surge forward current 正向浪涌电流	t_p = 10 ms, Tvj = 150°C	I_{FSM}	320	A
I^2t - value I^2t-值	t_p = 10 ms, Tvj = 150°C	I^2t	510	A^2s

6.2 Characteristic value

Parameter	Note or test condition	Symbol	Values			Unit
			Min.	Typ.	Max.	
Forward voltage 正向电压	T_{vj} = 150°C, I_F = 35 A	V_F		1.1		V
Reverse current 反向电流	T_{vj} = 150°C, V_R = 1600 V	I_R		1		mA
Thermal resistance, junction to case 结－外壳热阻	Per diode	R_{thJC}			0.75	K/W

7. IGBT, Brake-Chopper

7.1 Maximum Rated Values

Parameter	Note or test condition	Symbol	Values	Unit
Collector-emitter voltage 集电极—发射极间电压	T_{vj} = 25°C	V_{CES}	1200	V
Continuous DC collector current 连续集电极电流	T_C = 100°C, T_{vj} max = 150°C	$I_{C\ nom}$	35	A
Repetitive peak collector current 集电极峰值电流	t_P = 1 ms	I_{CRM}	70	A
Total power dissipation 总功率损耗	T_C = 25°C, $T_{vj\ max}$ = 150°C	P_{tot}	280	W
Gate-emitter peak voltage 栅极－发射极峰值电压		V_{GES}	+/- 20	V

7.2 Characteristic value

Parameter	Note or test condition		Symbol	Values			Unit
				Min.	Typ.	Max.	
Collector-emitter saturation voltage 集电极－发射极饱和电压	I_C = 35 A, V_{GE} = 15 V	T_{vj} = 25°C T_{vj} = 125°C T_{vj} = 150°C	$V_{CE,sat}$		1.52 1.7 1.76		V V V
Gate threshold voltage 栅极阈值电压	I_C = 0.25mA, V_{CE} = V_{GE}, T_{vj} = 25°C		$V_{GE,th}$		5.89		V
Gate charge 栅极电荷	V_{GE} = -15 V ... +15 V		Q_G		0.44		µC
Internal gate resistor 内部栅极电阻	T_{vj} = 25°C		R_{Gint}		2.2		Ω
Input capacitance 输入电容	f=1MHz, T_{vj}=25°C, V_{CE}=25V, V_{GE}=0V		C_{ies}		6.15		nF
Reverse transfer capacitance 反向传输电容	f=1MHz, T_{vj}=25°C, V_{CE}=25V, V_{GE}=0V		C_{res}		0.08		nF
Collector-emitter cut-off current 集电极-发射极截止电流	V_{CE} = 1200 V, V_{GE} = 0 V, T_{vj} = 25°C		I_{CES}			1	mA
Gate-emitter leakage current 栅极-发射极漏电流	V_{CE} = 0 V, V_{GE} = 20 V, T_{vj} = 25°C		I_{GES}			100	nA
Turn-on delay time, inductive load 开通延迟时间	I_C = 35A, V_{CE} = 600V V_{GE} = +15/-15V $R_{G,on}$ = 15Ω	T_{vj} = 25°C T_{vj} = 125°C T_{vj} = 150°C	$t_{d,on}$		0.091 0.098 0.098		us us us
Rise time, inductive load 上升时间	I_C = 35A, V_{CE} = 600V V_{GE} = +15/-15V $R_{G,on}$ = 15Ω	T_{vj} = 25°C T_{vj} = 125°C T_{vj} = 150°C	t_r		0.042 0.049 0.049		us us us

(table continues...) 待续

Parameter	Note or test condition		Symbol	Values			Unit
				Min.	Typ.	Max.	
Turn-off delay time, inductive load 关断延迟时间	I_C = 35A, V_{CE} = 600V V_{GE} = +15/-15V $R_{G,off}$ = 15Ω	T_{vj} = 25°C T_{vj} = 125°C T_{vj} = 150°C	$t_{d,off}$		0.168 0.189 0.196		us us us
Fall time, inductive load 下降时间	I_C = 35A, V_{CE} = 600V V_{GE} = +15/-15V $R_{G,off}$ = 5Ω	T_{vj} = 25°C T_{vj} = 125°C T_{vj} = 150°C	t_f		0.196 0.322 0.336		us us us
Turn-on energy loss per pulse 开通损耗能量	I_C = 35A, V_{CE} = 600V, L_s=35nH V_{GE} = +15/-15V, di/dt =530A/µs $R_{G,on}$ = 15Ω (T_{vj} = 150°C)	T_{vj} = 25°C T_{vj} = 125°C T_{vj} = 150°C	E_{on}		4.781 6.3 6.846		mJ mJ mJ
Turn-off energy loss per pulse 关断损耗能量	I_C = 50A, V_{CE} = 600V, L_s=35nH V_{GE} = +15/-15V, dv/dt =4200V/µs $R_{G,off}$ = 15Ω (T_{vj} = 150°C)	T_{vj} = 25°C T_{vj} = 125°C T_{vj} = 150°C	E_{off}		2.359 3.402 3.696		mJ mJ mJ
SC data 短路数据	V_{GE} ≤15V, V_{CC} =600 V, t_P ≤ 8 µs, T_{vj} = 150°C , C_{GE} = 0.0uF , V_{CEmax} = V_{CES} - L_{sCE} · di/dt		I_{SC}		238		A
Thermal resistance, junction to case 结一外壳热阻	Per IGBT		$R_{th,JC}$			0.52	K/W

8. Diode, Brake-Chopper

8.1 Maximum Rated Values

Parameter	Note or test condition	Symbol	Values	Unit
Repetitive peak reverse voltage 反向重复峰值电压	T_{vj} = 25°C	V_{RRM}	1200	V
Continuous DC forward current 连续正向直流电流		I_F	35	A
Repetitive peak forward current 正向重复峰值电流	t_P = 1 ms	I_{FRM}	70	A

8.2 Characteristic value

Parameter	Note or test condition		Symbol	Values			Unit
				Min.	Typ.	Max.	
Forward voltage 正向电压	I_F = 35 A, V_{GE} = 0 V	T_{vj} = 25°C T_{vj} = 125°C T_{vj} = 150°C	V_F		1.65 1.58 1.51		V V V

(table continues...) 待续

Parameter	Note or test condition		Symbol	Values			Unit
				Min.	Typ.	Max.	
Peak reverse recovery current 反向恢复峰值电流	I_F = 35A, V_R = 600V V_{GE} = -15V , - di_F/dt = 430 A/µs (T_{vj}=150°C)	T_{vj} = 25°C T_{vj} = 125°C T_{vj} = 150°C	I_{RM}		41.3 47.6 49.7		A A A
Recovered charge 恢复电荷	I_F = 35A, V_R = 600V V_{GE} = -15V , - di_F/dt = 430 A/µs (T_{vj}=150°C)	T_{vj} = 25°C T_{vj} = 125°C T_{vj} = 150°C	Q_r		2.52 4.41 5.18		µC µC µC
Reverse recovery energy 反向恢复损耗（每脉冲）	I_F = 35A, V_R = 600V V_{GE} = -15V , - di_F/dt = 430 A/µs (T_{vj}=150°C)	T_{vj} = 25°C T_{vj} = 125°C T_{vj} = 150°C	E_{rec}		0.35 0.84 1.12		mJ mJ mJ
Thermal resistance, junction to case 结一外壳热阻	Per diode		$R_{th,JC}$			0.63	K/W

9. NTC-Thermistor

9.1 Characteristic value

Parameter	Note or test condition	Symbol	Values			Unit
			Min.	Typ.	Max.	
Rated resistance 额定电阻值	Tc = 25°C	R_{25}		5.00		KΩ
Power dissipation 耗散功耗	Tc = 25°C	P_{25}			20	mW
B-value B-Z 值	$R_2=R_{25}\exp[B_{25/50}(1/T_2-1/(298, 15K))]$	B_{25}/B_{50}		3400		K
B-value B-Z 值	$R_2=R_{25}\exp[B_{25/75}(1/T_2-1/(298, 15K))]$	B_{25}/B_{75}		3430		K
B-value B-Z 值	$R_2=R_{25}\exp[B_{25/100}(1/T_2-1/(298, 15K))]$	B_{25}/B_{100}		3445		K

10. Module

10.1 Characteristic value

Parameter	Note or test condition	Symbol	Values			Unit
			Min.	Typ.	Max.	
Isolation Voltage 隔离电压	RMS, f=50HZ,1min	V_{ISOL}			2500	V
Stray inductance module 杂散电感		L_{sCE}		35		nH
Operation Junction Temperature 结温		T_{jop}	-40		150	˚C
Storage Temperature Range 存储温度范围		T_{stg}	-40		125	˚C
Mounting Torque 安装扭矩	Screw M5	M	3		6	N.m
Weight of Module 重量		G		180		g

11. Characteristics diagrams

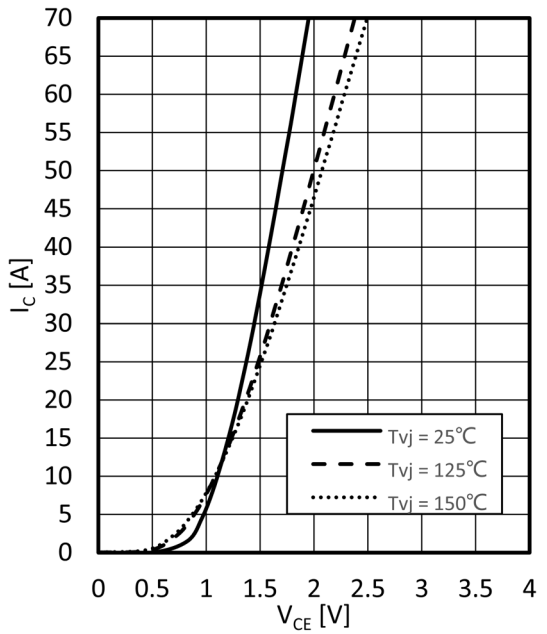

Output characteristic IGBT, Inverter (typical)

$I_C = f(V_{CE})$ $V_{GE} = 15V$

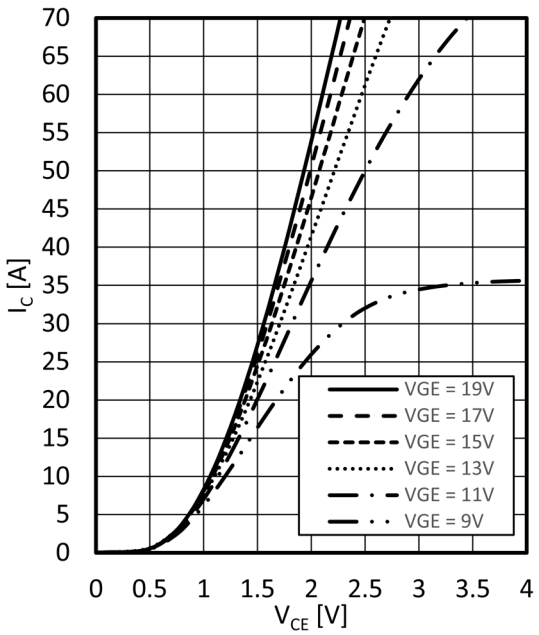

Output characteristic IGBT, Inverter (typical)

$I_C = f(V_{CE})$ $T_{vj} = 150°C$

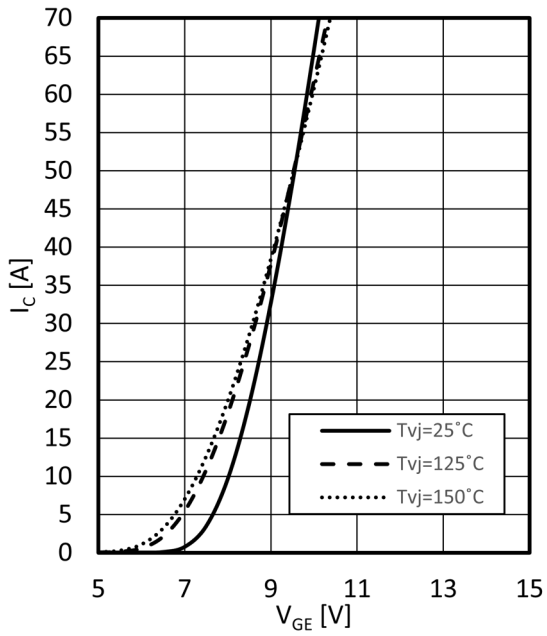

Transfer characteristic IGBT, Inverter (typical)

$I_C = f(V_{GE})$ $V_{CE} = 20V$

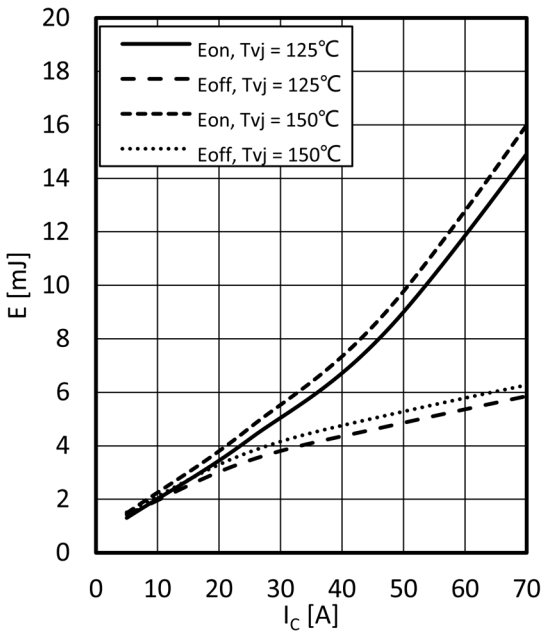

Switching losses IGBT, Inverter (typical)

$E_{on} = f(I_C)$, $E_{off} = f(I_C)$ $V_{GE} = \pm 15V$, $R_{Gon} = 15\ \Omega$

$R_{Goff} = 15\ \Omega$, $V_{CE} = 600V$

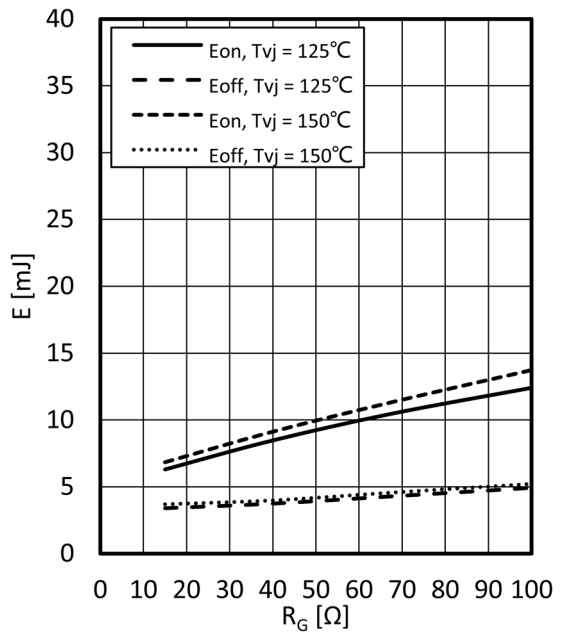

Switching losses IGBT, Inverter (typical)
$E_{on} = f(R_G)$, $E_{off} = f(R_G)$ $V_{GE} = \pm 15V$, $I_C = 35A$, $V_{CE} = 600V$

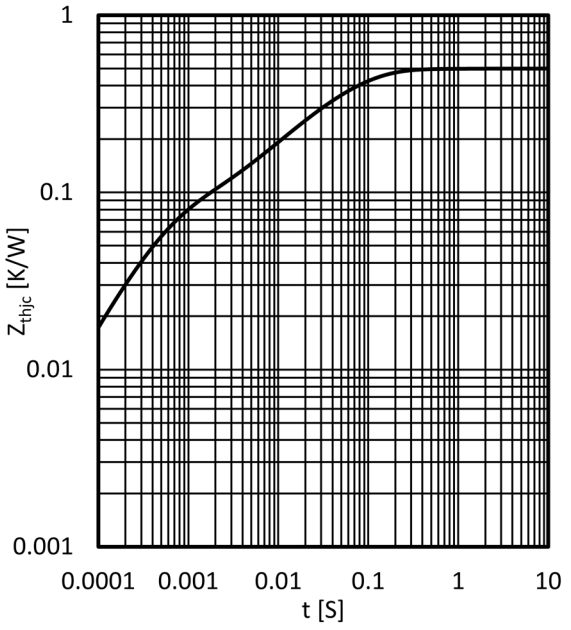

Transient thermal impedance IGBT, Inverter
$Z_{thJC} = f(t)$

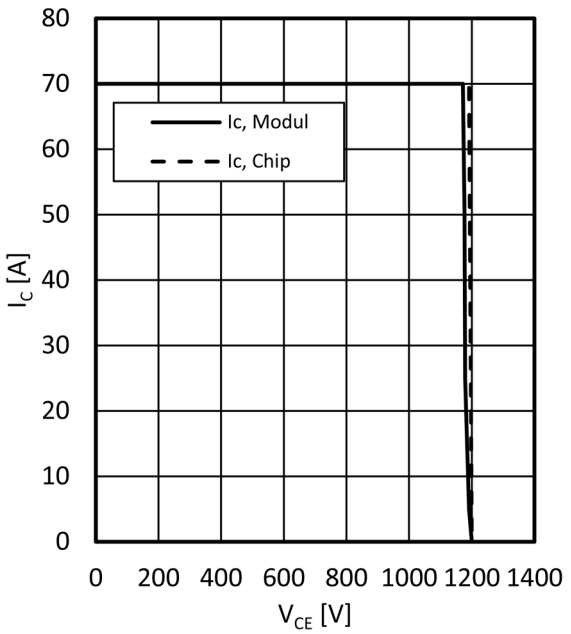

Reverse bias safe operating area IGBT, Inverter (RBSOA)
$I_C = f(V_{CE})$ $V_{GE} = \pm 15V$ $R_{Goff} = 15\Omega$, $T_{vj} = 150°C$

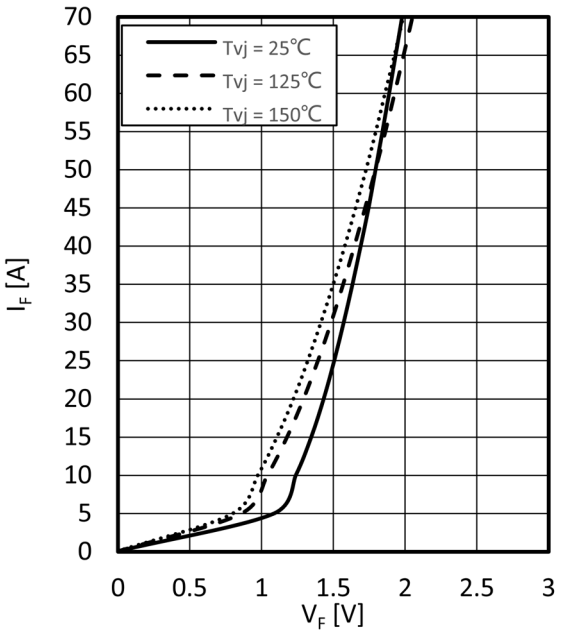

Forward characteristic of Diode, Inverter (typical)
$I_F = f(V_F)$

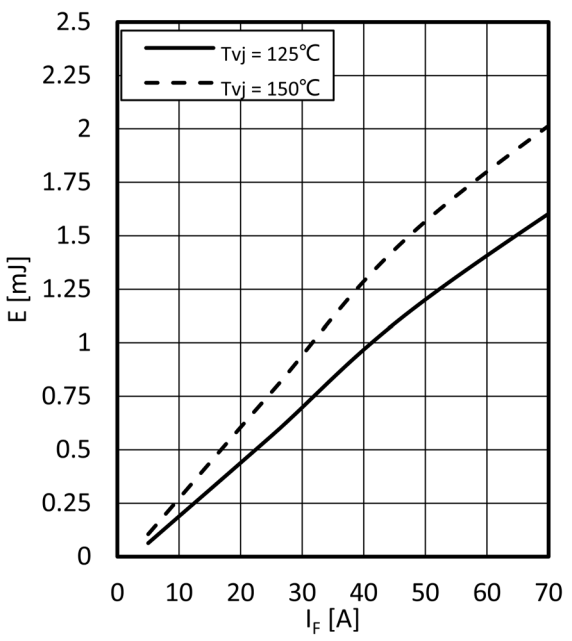

Switching losses Diode, Inverter (typical)

$E_{rec} = f(I_F)$ $R_{Gon} = 15\Omega$, $V_{CE} = 600V$

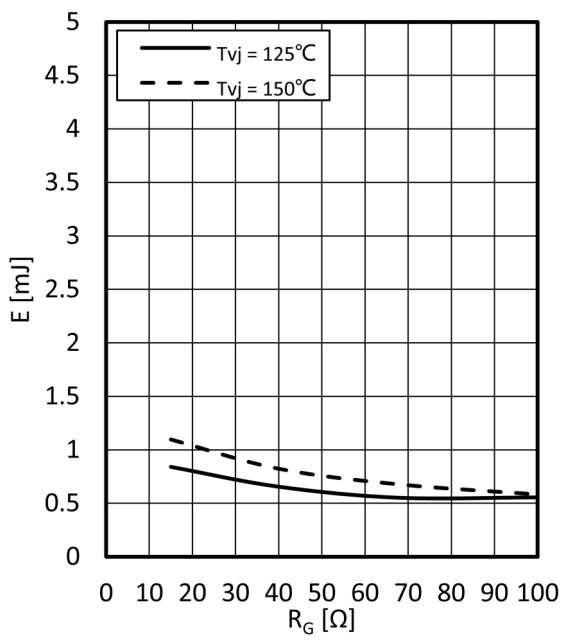

Switching losses Diode, Inverter (typical)

$E_{rec} = f(R_G)$ $I_F = 35$ A, $V_{CE} = 600V$

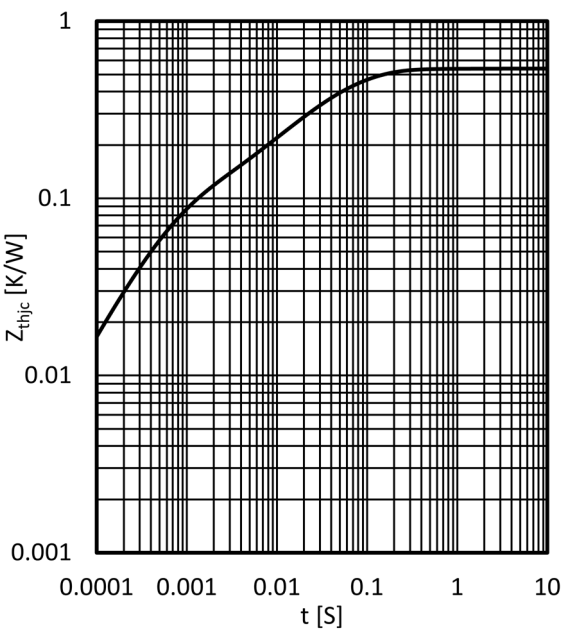

Transient thermal impedance Diode Inverter

$Z_{thJC} = f(t)$

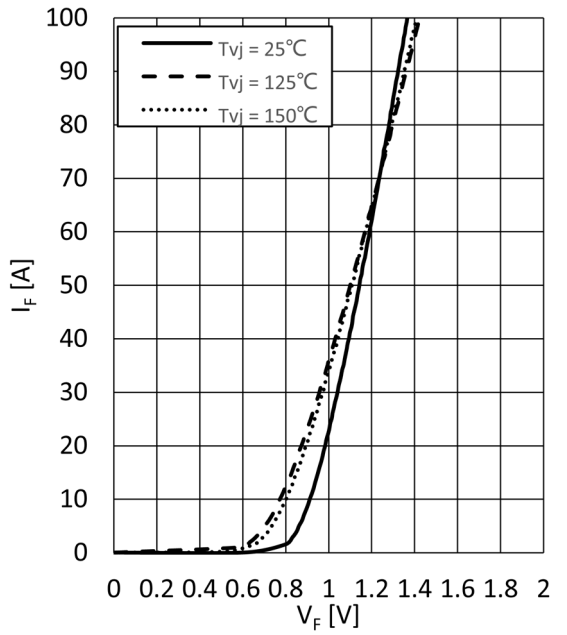

Forward characteristic of Diode, Rectifier (typical)

$I_F = f(V_F)$

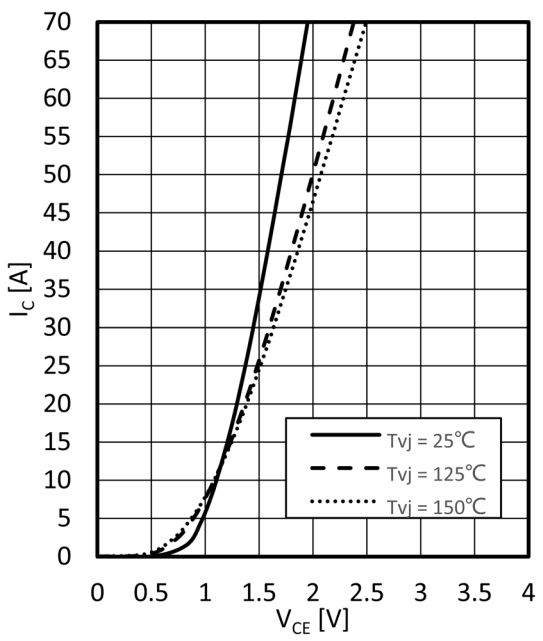

Output characteristic IGBT, Brake-Chopper (typical)

$I_C = f(V_{CE})$ $V_{GE} = 15V$

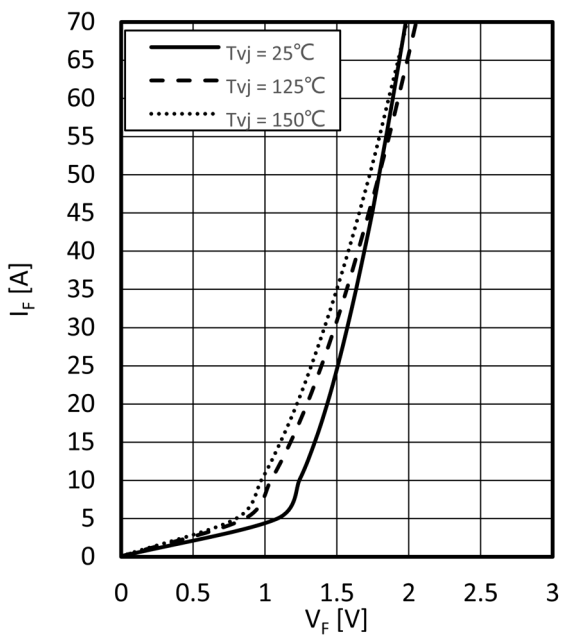

Forward characteristic of Diode, Brake-Chopper (typical)

$I_F = f(V_F)$

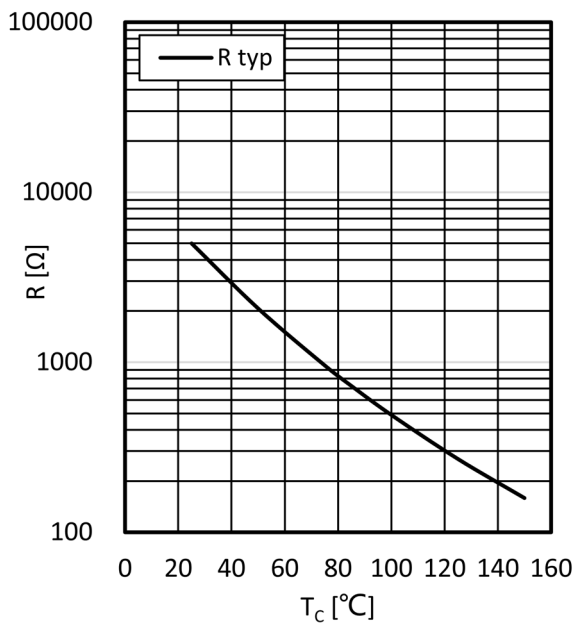

NTC-Thermistor-temperature characteristic (typical)

R=f(T)

12. Circuit Diagram

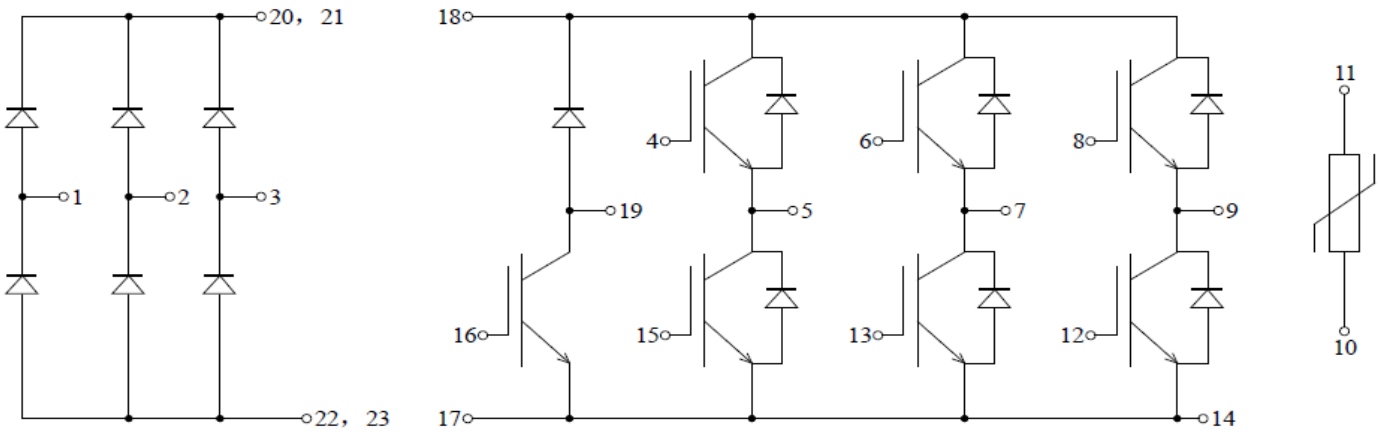

Figure 3

13. Package Outlines

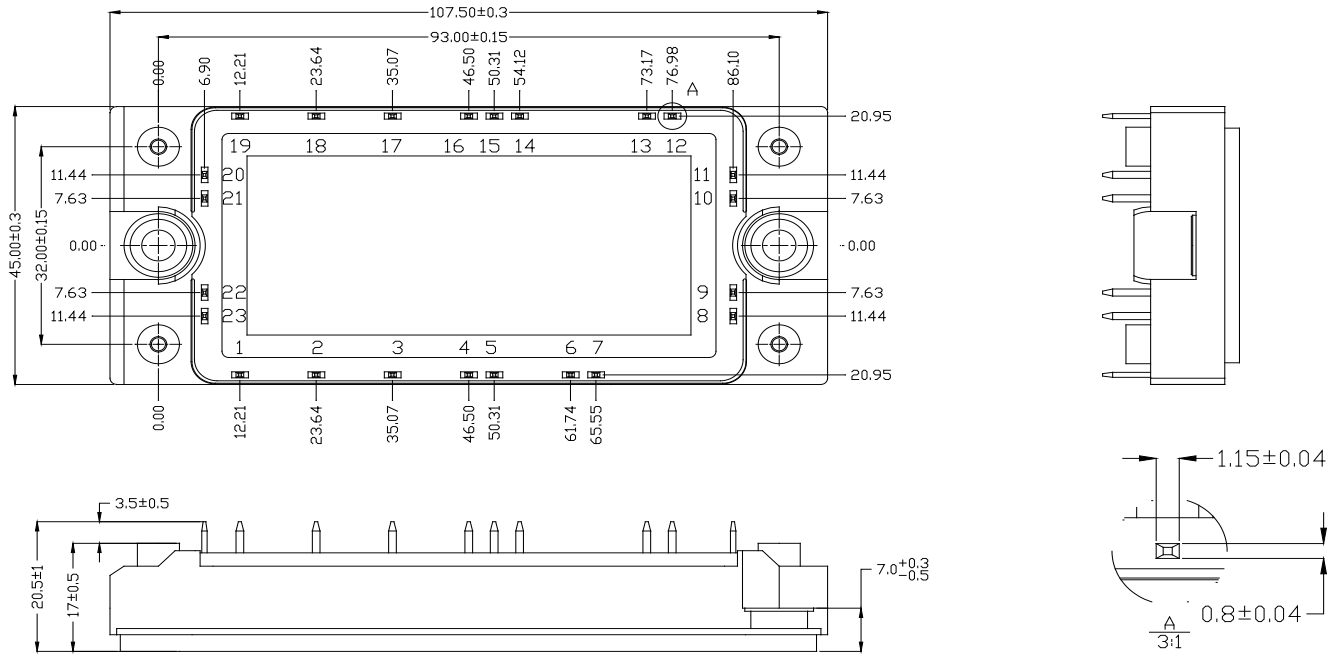

Figure 4

Technical datasheet